Pressure gauges with diaphragm with or without liquid filling for especial safety

Accuracy class 1.6

Nominal sizes ND 100, 160
Connection position bottom, radial

Description

The design principle and material selection of our pressure gauges allow them to meet the stringent demands occurring in service in industrial production plants, particulary in safety areas.

An extremely high resistance to overpressure is achieved by underpropping the diaphragm. If the gauges should be overloaded, accidents are prevented by a laminated safety glass, an unbreakable partition in the unit (solid front), and a blow-out rear panel to the case. The special material coating on the components in contact with the process medium protects them from attack by chemically aggressive media. Process reliability with highly viscous, crystallizing or heterogeneous media is increased by the use of open process connections, ensuring that the gauges are easy to clean, e.g. by flushing.

Features

- o Special material for high corrosion resistance
- o High resistance to overpressure
- o Avoidance of accidents by unbreakable partition (solid front) and blow-out rear panel
- o Damping of the indicator by glycerine filling
- o Higher process reliability with highly viscous, crystallizing or heterogeneous process media

Ranges

0 ... 16 mbar to 0 ... 250 mbar

0 ... 0.4 bar to 0 ... 40 bar

and all corresponding ranges for negative or negative and positive gauge pressure

Applications

Chemical and petrochemical industry,
Food and beverages industries;
mechanical engineering, plant and apparatus construction.

Model : P2125, P2126, P2127, P2128

Technical data

Model	P2125	P2127	P2126	P2128	Options
fill	**without filling**		**with filling**		
Nominal size	100	160	100	160	
Symbol					
Accuracy class [1])	1.6 to EN 837-3				
in accordance to	EN 837-3				
Ranges	0 ... 16 to 0 ... 250 mbar: flange diameter ∅ 160 mm 0 ... 0.4 bis 0 ... 40 bar: flange diameter ∅ 100 mm plus all corresponding ranges for negative or negative and positive gauge pressure				
Application	Constant load: full scale value Alternating load: 0.9 x full scale value				
Overload protection	5 x full scale value, max. 40 bar				10 x full scale value, max. 40 bar vacuum proof -1 bar
Liquid filling	none		Glycerine 86% / Water 14%		
Temperatures - Medium - Ambient	 Tmin. -20°C, Tmax. 100°C Tmin. -20°C, Tmax. 60°C				
Protection to EN 60 529/IEC 529	IP 45		IP 65		
Case and upper flange	stainless steel 1.4301 with unbreakable partition (solid front) and blow-out rear panel				
Process connection and lower flange	stainless steel 1.4571, G 1/2 B, SW 22				other threads on request
Elastic measuring element	≤ 0,40 bar Edelstahl 1.4571 > 0,40 bar INCONEL 718 (Diaphragme Inconel 718)				
Movement	Stainless steel				
Dial	Aluminium, white, scale and imprint black				Dual scale
Pointer	Aluminium, black				
Window	Laminated safety glass				
Bezel	Bayonet ring, stainless steel 1.4301				
Seal to: pressure chamber filled internal chamber	FPM (Seals made of Viton ®) [2])		FPM (Seals made of Viton ®) [2]) NBR-bellow (Perbunan)		Metal bellow (stainless steel)
Components in contact with medium	See process connection and lower flange and elastic measuring element				coated with special materials: PTFE, PFA, ECTFE, Hastelloy, Monel, Nickel, Tantal, Titan, Silver
Open process connection					to DIN / ANSI from DN 15 to DN 80 (preferred nominal diameters DN 25 and DN 50)

[1]) with liquid filling: ≤ 25 mbar accuracy class 2.5

[2]) Viton ® fluoroelastomer, a product of DuPont Dow Elastomers

Dimensions

Standard version

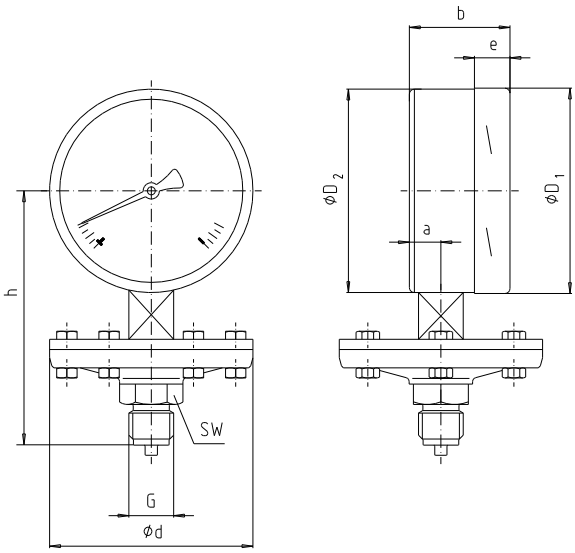

ND	Ranges (bar)	Dimensions (mm)									Weight (kg)
		d	a	b	D_1	D_2	e	G	h ± 2	SW	
100	≤ 0.25	160	24	58.5	101	100	17.5	G 1/2 B	117	22	1.90
160			24	58	161	160	17.5	G 1/2 B	149	22	4.10
100	≥ 0.4	100	24	58.5	101	100	17.5	G 1/2 B	117	22	2.50
160			24	58	161	160	17.5	G 1/2 B	149	22	4.20

connection to EN 837-3

Options with connection DIN DN 25 [1]), PN 10 to 40

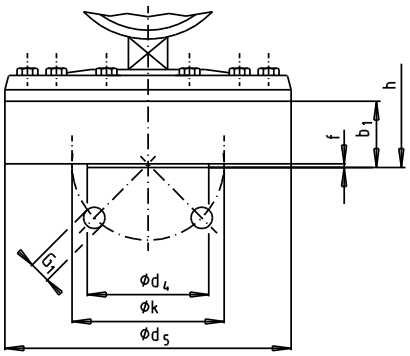

Ranges 0 ... 16 to 0 ... 250 mbar

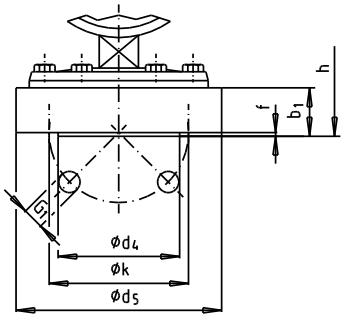

Ranges 0 ... 0.4 to 0 ... 40 bar

ND	process connection DIN DN 25 PN 10 bis 40	Dimension (mm)							Weight (kg)
		d_5	k	d_4 [2])	b_1	f	G_1	h ± 2	
100	≤ 0,25 bar	160	85	68	36	2	4 x M 12	122	5,00
160			85	68	36	2	4 x M 12	152	5,70
100	≥ 0,4 bar	115	85	68	25	2	4 x M 12	111	3,70
160			85	68	25	2	4 x M 12	141	4,00

Other dimensions as in standard version

[1]) Suitable for connection to mating flange to DIN 2566, 2567, 2581, 2583, 2633, 2635, 2642, 2653, 2656 and 2673

[2]) Sealing strip form D.

Options with process connection DIN DN 50 [1]), PN 10 to 40

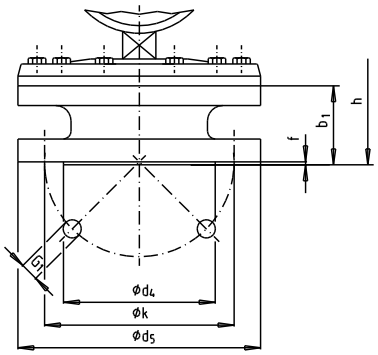

Ranges 0 ... 16 to 0 ... 250 mbar

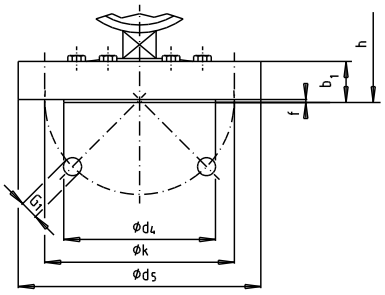

Ranges 0 ... 0.4 to 0 ... 40 bar

ND	process connection DIN DN 50 PN 10 bis 40	Dimension (mm)							Weight (kg)
		d_5	k	d_4 [2])	b_1	f	G_1	h ± 2	
100	≤ 0.25	165	125	102	54	3	4 x ∅ 18	140	6.20
160			125	102	54	3	4 x ∅ 18	170	7.00
100	≥ 0.4	165	125	102	30	3	4 x ∅ 18	106	4.70
160			125	102	30	3	4 x ∅ 18	136	5.20

Other dimensions as in standard version

[1]) Suitable for connection to mating flange to DIN 2566, 2567, 2581, 2583, 2633, 2635, 2642, 2653, 2656 and 2673

[2]) Sealing strip form D.

Modifications reserved