Shimaden, Temperature and Humidity Control Specialists

°C
%RH
SHIMADEN

Series SRS11A/12A/13A/14A

SHIMADEN DIGITAL CONTROLLER

RoHS compliance

BASIC FEATURES

- ☐ *Multi-input and multi-range performance*
- ☐ *Small instrument depths (62mm - 65mm) save space, thus securing a larger installation area.*
- ☐ *SV setting: 3 points*
- ☐ *PID Value: 3 types*
- ☐ *2-output heating and cooling control available (optional)*
- ☐ *Total 32 steps Program available (optional) (1-4 pattern, 32-8 step)*
- ☐ *RS-485 Interface available (optional) (Master/slave function, Modbus/Shimaden Protocol)*
- ☐ *Heater break/heater loop alarm (optional)*
- ☐ *A wide selection of additional functions (optional) is available to suit various needs.*
- ☐ *Possible to switch off SV/PV value by key operation*
- ☐ *Parameter mask (non-display) / lock (key lock) function*

SMALLER INSTRUMENT DEPTHS

Smaller instrument depths save space and secure a larger and flexible installation area.

SRS11A Series
(48×48)

SRS12A Series
(72×72)

SRS13A Series
(96×96)

SRS14A Series
(48×96)

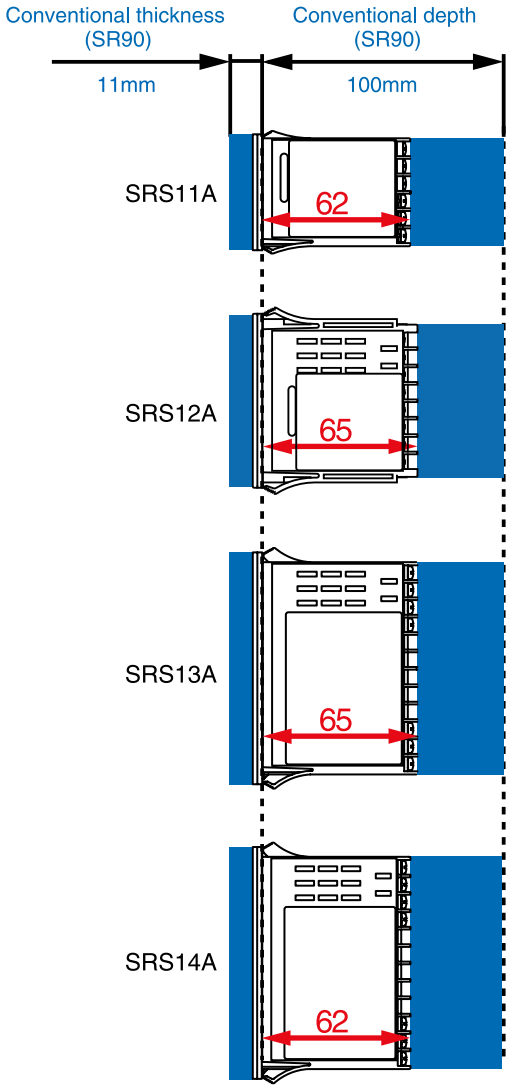

Blue part indicates the size of
the conventional instruments (SR90 Series).

NAMES AND FUNCTIONS

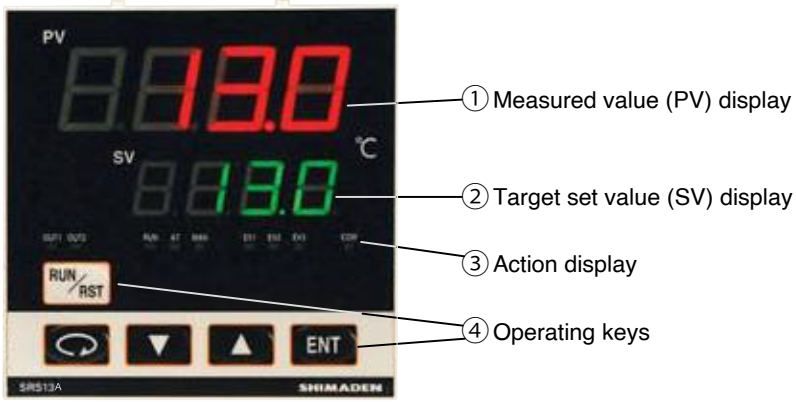

① Measured value (PV) display
Displays current PV value.
② Target set value (SV) display
Displays current SV value.
③ Action display
RUN/AT/MAN/OUT1/OUT2/EV1/EV2/
EV3/COM
④ Operating keys
…Parameter key
Displays the next screen in various screen groups.
…Down key
Decrements setting values.
…Up key
Increments setting values.
ENT …Enter key
Enters setting values.
RUN/RST …RUN/RST key

■ EXAMPLE OF 2-OUTPUT CONTROL BY SELECTING CONTROL OUTPUT 2

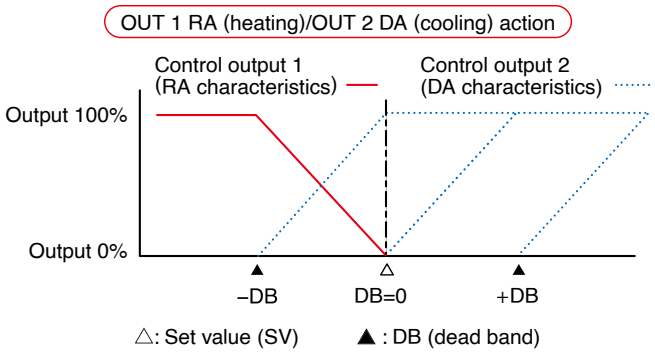

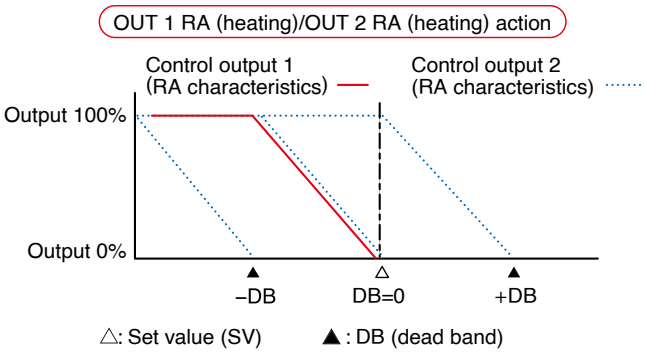

■ EXAMPLE OF TUNNEL FURNACE PROGRAM TEMPERATURE CONTROL

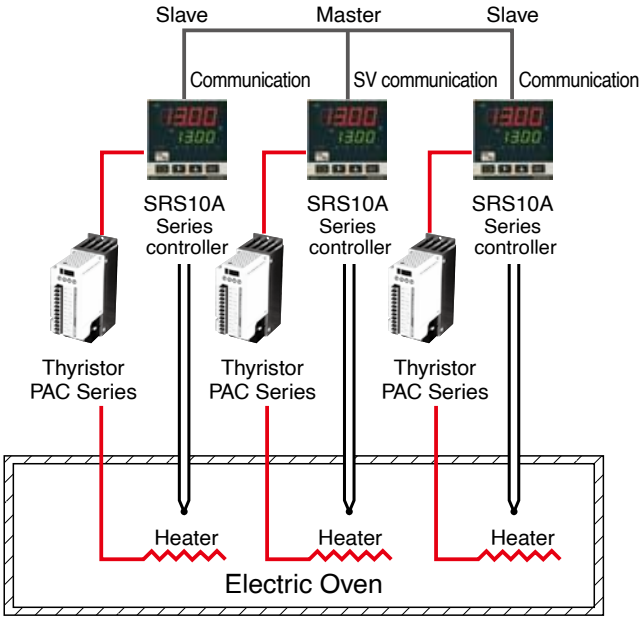

■ CT INPUT (CONTROL LOOP ALARM)

For 2 heating stages

SRS10A Series

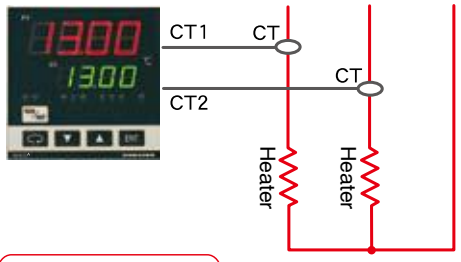

For three-phase

SRS10A Series

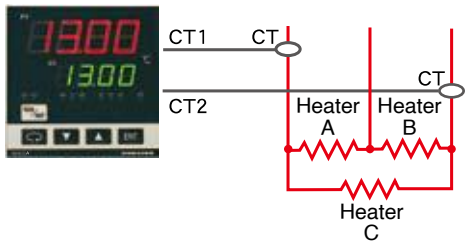

For three-phase

Broken area	A	B	C
CT1	Detectable	Undetectable	Detectable
CT2	Undetectable	Detectable	Detectable

■ COMMUNICATION

Serial communication with PC/sequencer is possible by RS-485.

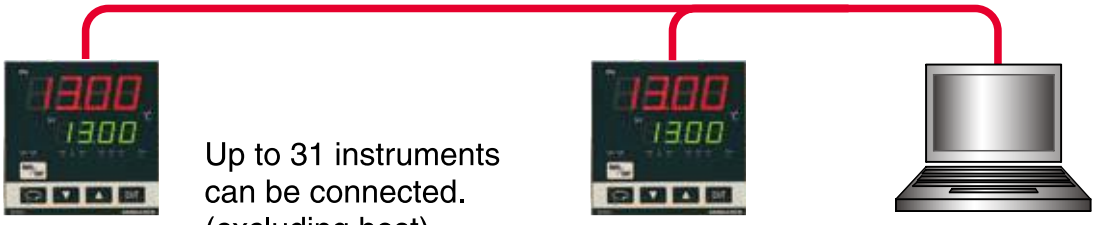

SRS10A Series

Up to 31 instruments can be connected. (excluding host)

SRS10A Series

PC, etc.

Unit: mm

■ SRS11A

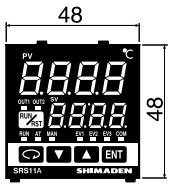

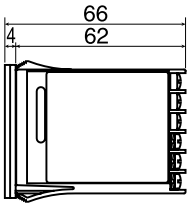

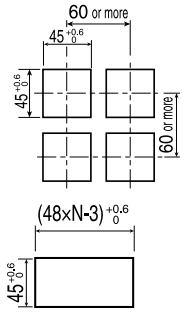

In the case of closely-mounted horizontally
N=The number of instruments
(When closely-mounted in series, cold junction compensation accuracy will be ±3˚C.)

■ SRS12A

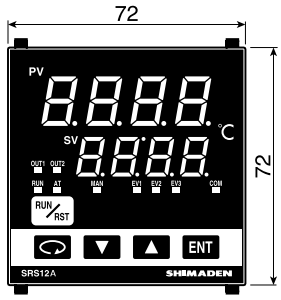

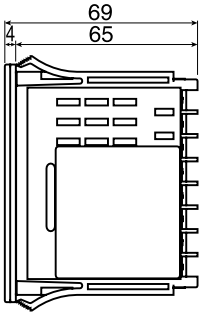

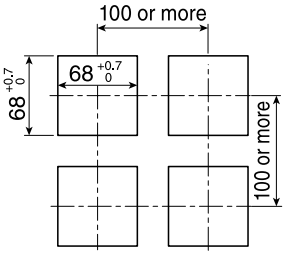

■ SRS13A

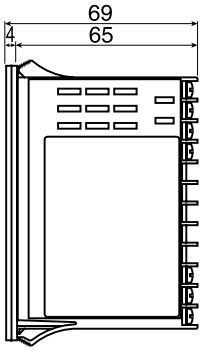

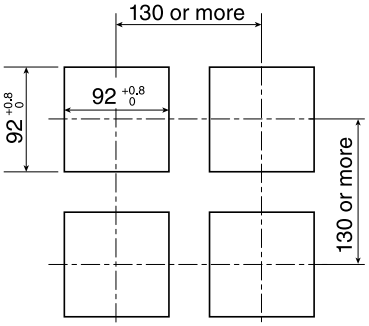

■ SRS14A

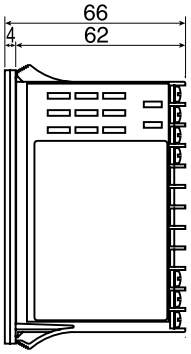

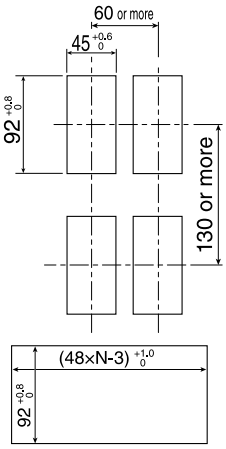

In the case of closely-mounted horizontally
N=The number of instruments
(When closely-mounted in series, cold junction compensation accuracy will be ±3˚C.)

■ **Display**

● Display methods

Digital display : Measured value (PV)/7 segments red LED 4 digits, target set value (SV)/7 segments green LED 4 digits
SRS11A PV height of character: Approx. 12mm SV height of character: Approx. 9mm
SRS12A PV height of character: Approx. 15mm SV height of character: Approx. 12mm
SRS13A PV height of character: Approx. 20mm SV height of character: Approx. 13mm
SRS14A PV height of character: Approx. 12mm SV height of character: Approx. 9mm

Status display : LED lamp display
Green: RUN, AT, MAN, OUT1, OUT2, COM
Orange: EV1, EV2, EV3

● Display accuracy : ±(0.25% FS+1 digit) Excluding cold junction temperature compensation accuracy of thermocouple input
Accuracy if set value is lower than -100ºC with K, T, U thermocouples is ±0.7%FS.
Accuracy guarantee not applicable to 400ºC and below of B thermocouple.

● Display accuracy maintaining range : 23ºC±5ºC

● Display resolution : Depends on measuring range and scaling (0.001, 0.01, 0.1, 1)

● Measured value display range : -10 – 110% of measuring range
(Range of Pt-200 – 600ºC is -240 – 680ºC, range of JPt-200 – 500ºC is -240 – 570ºC.)

● Display updating cycle : 0.25 seconds

■ **Setting**

● Setting method : By operating 5 keys (PARA, DOWN, UP, ENT, RUN/RST) on the front panel

● Target value setting range : Same as measuring range (within setting limiter)

● Set value limiter : Individual setting for higher and lower limits, any value is selectable within measuring range.
(Lower limit value<Higher limit value)

● Key lock : OFF, 1 – 3 (4 level)
OFF: No key lock
1: Only user setting screen group and communication mode can be changed.
2: Only SV and communication mode can be changed.
3: Only key lock can be changed.

■ **Parameter mask/lock function : Controls parameter displays/key locks**

● Target parameter : STBY/EXE (RST/RUN) switching screen and all parameters except monitor screen
(control for each screen group possible)

PID screen group : Settings for each PID No. not possible (parameters are set by applying all PID Nos.)

PROG screen group : Settings for each PTN No. not possible (parameters are set by applying all PROG Nos.)

STEP screen group : Settings for each STEP No. not possible (parameters are set by applying all STEP Nos.)

■ **Input**

● Type of input : Selectable from multiple (TC, Pt, mV) and voltage (V)

● Thermocouple : B, R, S, K, E, J , T, N, PLII, WRe5-26, {U, L (DIN43710)}, Metal-chromel (AuFe-Cr)

Input resistance : 500kΩ minimum

External resistance tolerance : 100Ω maximum

Burnout function : Standard feature (up scale)

Cold junction compensation accuracy : ±2ºC (between 5 and 45ºC of ambient temperature), ±3ºC if mounted closely

● R.T.D. : Pt100/JPt100, 3-wire type

Amperage : 0.25mA

Lead wire tolerance resistance : 5Ω maximum/wire (3 lead wires should have the same resistance.)

● Voltage mV : -10 – 10, 0 – 10, 0 – 20, 0 – 50, 10 – 50, 0 – 100mV DC

V : -1 – 1, 0 – 1, 0 – 2, 0 – 5, 1 – 5, 0 – 10V DC

Input resistance : 500kΩ minimum
Current input (0 – 20, 4 – 20mA DC) is handled through external receiving impedance (250Ω).

● Input scaling function : Scaling possible for voltage (mV, V) input

Scaling range : -1999 – 9999 units

Span : 10 – 10000 units

Position of decimal point : None, 1, 2 and 3 digits on the right of decimal point

● Sampling cycle : 0.25 seconds

● PV bias : -1999 – 2000 units

● PV filter : 0 – 9999 seconds

● PV gain : -5.00 – +5.00%

● Isolation : Not insulated from input, system, DI, and CT input but insulated from others

■ **Control**

● Control mode

With 1 output : Expert PID control with auto tuning function

With 2 outputs : Expert PID control with auto tuning function PID (output 1) + PID (output 2)

● Type of control/rating (common to output 1 and 2) : Contact/1a 240V AC 2A (resistive load) 1.2A (inductive load)
SSR drive voltage/12V±1.5V DC (maximum load current 30mA)
Current/4 – 20mA DC (maximum load resistance 600Ω)
Voltage/0 – 10V DC (maximum load current 2mA)

Control output resolution : Control output 1: approx. 0.008% (1/13000)
Control output 2: approx. 0.008% (1/13000)
Output accuracy : Control output 1: ±1.0%FS (5 – 100% output)
Control output 2: ±2.0%FS (5 – 100% output)

- Control output 1
  - Proportional band (P) : OFF, 0.1 – 999.9%FS (ON/OFF action by OFF)
  - Integral time (I) : OFF, 1 – 6000 seconds (P or PD action by OFF)
  - Derivative time (D) : OFF, 1 – 3600 seconds (P or PI action by OFF)
  - Target value function : OFF, 0.01 – 1.00
  - ON/OFF hysteresis : 1 – 999 units (Effective when P=OFF)
  - Manual reset : -50.0 – 50.0% (Effective when I=OFF)
  - Output limiter : Lower limit 0.0 – 99.9%, higher limit 0.1 – 100.0% (Lower limit value<Higher limit value)
  - Proportional cycle : 1 – 120 seconds (for contact and SSR drive voltage output)
- Control output 2 (option)
  - Proportional band (P) : OFF, 0.1 – 999.9%FS (ON/OFF action by OFF)
  - Integral time (I) : OFF, 1 – 6000 seconds (P or PD action by OFF)
  - Derivative time (D) : OFF, 1 – 3600 seconds (P or PI action by OFF)
  - Target value function : OFF, 0.01 – 1.00
  - ON/OFF hysteresis : 1 – 999 units (Effective when P=OFF)
  - Dead band : -1999 – 5000 units
  - Output limiter : Lower limit 0.0 – 99.9%, higher limit 0.1 – 100.0% (Lower limit value<Higher limit value)
  - Proportional cycle : 1 – 120 seconds (for contact and SSR drive voltage output)
- Manual control
  - Output setting range : 0.0 – 100.0% setting resolution: 0.1%
  - Manual ↔ auto switching : Balanceless bumpless (within proportional range)
- Soft start : Set individually for output 1 and output 2
  OFF, 1 – 120 seconds
- AT point : SV value in execution
- Control output characteristic : RA (reverse action characteristic)/DA (direct action characteristic) switching by front key or communication
  : Set individually for output 1 and output 2
  RA (reverse action characteristic): heating action
  DA (direct action characteristic): cooling action
- Isolation : Contact output isolated from all
  : Analog output not insulated from SSR drive voltage, current and voltage output but insulated from others (Control output 1 and 2 not insulated other than contact output)

■ Event output (option, 3 points maximum)

- Number of output points : 3 points maximum (EV1, EV2, EV3)
  However, EV3 is exclusive selection from control output 2 and DI4.
- Types : Selectable from the following 20 types for EV1, EV2 and EV3:
  no assignment, higher limit deviation alarm, lower limit deviation alarm, outside higher/lower limit deviation alarm, inside higher/lower limit deviation alarm, higher limit absolute value alarm, lower limit absolute value alarm, scaleover, EXE signal (RUN signal), output 1 inverted output (Contact output only), heater 1 break/loop alarm, heater 2 break/loop alarm, step signal, pattern signal, program end signal, hold signal, program signal, upslope signal, downslope signal, guarantee soak signal
- Event setting range
  - Absolute values : Within measuring range (both higher limit and lower limit)
  - Deviations : -1999 – 2000 units (both higher limit and lower limit)
  - Higher/lower limit deviations : 0 – 2000 units (within/outside)
- Event action : ON/OFF action
- Hysterisis : 1 – 999 units
- Standby action : Selectable from following 4 types
  1 Without standby action
  2 Standby 1 (when power is applied, STBY (RST)→EXE (RUN))
  3 Standby 2 (when power is applied, STBY (RST)→EXE (RUN), execution SV is changed.)
  4 Control mode (without standby action: no alarm is output at the time of abnormal input.)
- Output type/rating : Contact (EV1, EV2/ 1a x 2 points common EV3/ 1a independent)/ 240V AC 2A (resistive load)
- Output updating cycle : 0.25 seconds
- Latching function : Alarm action holding function (can be assigned for deviation alarm/absolute value alarm and heater break alarm)
  ON (effective)/OFF (not effective) selection
  Unlatched by key operation, DI or communication when latching
- Output characteristic : Selectable from NO and NC
- Isolation : Isolated from all

■ Programming function (option)

- No. of pattern : Maximum 4 patterns (can be set to 1, 2 and 4)
- No. of step : Maximum 8 steps (4 patterns), 16 (2 patterns), 32 (1 pattern)
  Total number of steps = 32
- No. of PID type : Maximum 3

- Time setting : 0 minutes 0 seconds – 99 minutes 59 seconds/1 step or 0 hours 0 minutes – 99 hours 59 minutes/1 step
- Setting resolution : 1 minute or 1 second
- Time accuracy : ±(setting time x 0.005 + 0.25 seconds)
- Setting parameter for each step : SV, step time, PID No.
- No. of pattern execution : Maximum 9999
- PV start : ON/OFF
- Hold : Possible either by front panel key input, external control input or communication
- Advance : Possible either by front panel key input, external control input or communication
- Power failure compensation : None (setting contents are maintained and elapsed time, execution step and number of execution are reset.)
- Guarantee soak zone : OFF, 1 – 999 units

■ External control input (DI) (option)

- Number of input points
  SRS11A : Maximum 4 points: Exclusive selection with 3 points CT input (DI1, DI2, DI3)
  Exclusive selection with 1 point (DI4), control output 2 and event output (EV3)
  SRS12A, 13A, 14A : Maximum 4 points: 3 points (DI1, DI2, DI3) no exclusive selection
  Exclusive selection with 1 point (DI4), control output 2 and event output (EV3)
- Type of DI assignment : Selectable from the following 14 types for each DI.
  No assignment, EXE1 (RUN1) (control execution/suspension), EXE2 (RUN2) (control execution/suspension), MAN (manual output), AT (auto tuning), ESV2 (SV external selection 2 bit), ACT1 (output 1 output characteristics), ACT2 (output 2 output characteristics), PROG (programming), HLD (hold), ADV (advance), PTN2 (start pattern selection 2 bit), PTN3, (start pattern selection 3 bit), L_RS (unlatching)
- Action input : Non-voltage contact or open collector (level action) Approx. 5V DC 1mA maximum
- Input minimum holding time : 0.25 seconds
- Isolation : Not insulated from DI input, system, and CT input but insulated from others

■ CT input (option) : 2 points selectable when the type of control output (OUT1, OUT2) is contact or SSR
In case of SRS11A, exclusive selection with DI1, DI2 and DI3

- Types of current detection target : Assignable for OUT1 and OUT2
- Current detection method : By CT sensor (sold separately)
- Current capacity : 30A/50A
- Current setting range : OFF, 0.1 – 50.0 A (alarm action off when set to OFF)
- Setting resolution : 0.1A
- Current display range : 0.0 – 55.0A
- Display accuracy : ±2.0 A (for sine wave 50 Hz)
- Alarm action : Heater break detection when control output ON: Alarm output ON
  Heater loop alarm detection when control output OFF: Alarm output ON
- Alarm output : Assignable for event output (EV1, 2, 3)
- Minimum time for action confirmation : ±0.25 seconds for both ON and OFF (each 0.5 second)
- Alarm maintain mode : Selectable from latching function ON (effective)/OFF (non-effective)
- Standby action : Selection of "OFF" or "ON" (1, 2, 3) (Standby when power applied only)
- Sampling cycle : 0.25 seconds
- Isolation : Not insulated from CT input, input, system and DI but insulated from others

■ Communication function (option) : Exclusive selection with analog output for SRS11A

- Type of communication : EIA standard RS-485
- Communication system : 2-line half duplex start-stop synchronization system
- Communication speed : 1200, 2400, 4800, 9600, 19200, 38400 bps
- Data format : Selectable from 7E1, 7E2, 7N1, 7N2, 8E1, 8E2, 8N1, 8N2
- Communication delay time : 1 – 100 (x 0.512 msec)
- Max. number of connections : 32 including host
- Communication address : 1 – 255
- Communication code : ASCII, MODBUS RTU binary code only
- Communication protocol : Shimaden standard protocol / MODBUS ASCII, RTU
- Other : Start character and BCC operating method can be selected.
- Communication memory mode : Selectable from EEP, RAM and r_E
- Communication master mode : Can be used as master device when using multiple units
- Start slave address setting : Broadcast, 1 – 255
- End slave address setting : Start address – start address +30
- Write-in data address settng : 0000H – FFFFH
- Communication distance : Max. 500 m (differs according to conditions)
- Isolation : Isolation for all

■ Analog output (option) : Exclusive selection with communication for SRS11A

- Number of output points : 1 point
- Types of output : Selectable from measured value, target set value (execution SV), control output 1 and control output 2

- Output signal/rating : Current 4 – 20 mA DC (max. load resistance 300Ω)
  Voltage 0 – 10V DC (max. load current 2 mA)
  Voltage 0 – 10mV DC (output resistance 10Ω)
- Output scaling : Within measuring range or output range (Inversed scaling possible)
- Output accuracy : ±0.3%FS (for display value)
- Output resolution : Approx. 0.008% (1/13000)
- Output updating cycle : 0.25 seconds
- Output limiter : Lower limit 0.0 – 99.9%, higher limit 0.1 – 100.0% (Lower limit value<Higher limit value)
- Isolation : No isolation with control output P, I and V

■ General specifications

- Data storage : Non-volatile memory (EEPROM)
- Ambient conditions for operations
  - Temperature : -10 – 50ºC
  - Humidity : Max. 90%RH (no dew condensation)
  - Elevation : Max. 2000 m above sea level
  - Category : II
  - Pollution class : 2
- Storage temperature : -20 – 65ºC
- Supply voltage : 100 – 240V AC±10%, 50/60Hz or 24V AC/DC±10%
- Input/noise removal ratio : Normal mode 50dB minimum (50/60 Hz)
- Insulation resistance : Between input/output terminals and power terminal Min. 500V DC, 20 MΩ
- Dielectric strength : Between input/output terminals and power terminal, 2300V AC, 1 minute
- Power consumption
  - SRS11A : Max. 11VA for 100 – 240V AC
    6VA for 24V AC
    4W for 24V DC
  - SRS12A, 13A, 14A : Max. 14VA for 100 – 240V AC
    8VA for 24V AC
    6W for 24V DC
- Applicable standards EMC : EN61326-1: 2006 EN61326-2-3: 2006
  Safety : IEC61010-1 and EN61010-1: 2001
- Material of case : PC resin molding (UL94V-0)
- External dimensions : SRS11A: H48 × W48 × D66 mm (in panel 62mm)
  SRS12A: H72 × W72 × D69 mm (in panel 65mm)
  SRS13A: H96 × W96 × D69 mm (in panel 65mm)
  SRS14A: H96 × W48 × D66 mm (in panel 62mm)
- Panel thickness : 1.0 – 3.5 mm
- Panel cutout : SRS11A: H45 × W45 mm
  SRS12A: H68 × W68 mm
  SRS13A: H92 × W92 mm
  SRS14A: H92 × W45 mm
- Weight : SRS11A: Approx. 120 g
  SRS12A: Approx. 190 g
  SRS13A: Approx. 220 g
  SRS14A: Approx. 160 g

ORDERING INFORMATION

ITEM	CODE			SPECIFICATIONS	
SERIES	SRS11A-			DIN 48x48 Digital Controller	
INPUT	8	Multi-input		Thermocouple: B, R, S, K, E, J, T, N, PLII, WRe5-26, {U, L (DIN43710)}, AuFe-Cr	
				R.T.D.: Pt100/JPt100 Voltage (mV): -10 – 10, 0 – 10, 0 – 20, 0 – 50, 0 – 100, 10 – 50mV DC	Scaling Possible (inverse scaling impossible) Range: -1999 – 9999 Span: 10 – 10000
	4	Current (mA)		Current (mA): 0~20, 4~20mA DC Receiving impedance: 250Ω	
	6	Voltage (V)		-1 – 1, 0 – 1, 0 – 2, 0 – 5, 1 – 5, 0 – 10V DC Input resistance: Min. 500kΩ	
CONTROL OUTPUT 1	Y			Contact: 1a, Contact capacity: 240V AC 2A/resistive load Proportional cycle: 1 – 120 sec.	
	I			Current: 4 – 20mA DC Load resistance: 600Ω max.	
	P			SSR drive voltage: 12V±1.5V DC/30mA max. Proportional cycle: 1 – 120 sec.	
	V			Voltage: 0 – 10V DC Load current: 2mA max.	
CONTROL OUTPUT 2 (OPTION)	N-			None	
	Y-			Contact: 1a, Contact capacity: 240V AC 2A/resistive load Proportional cycle: 1 – 120 sec.	
	I-			Current: 4 – 20mA DC Load resistance: 600Ω max.	
	P-			SSR drive voltage: 12V±1.5V DC/30mA max. Proportional cycle: 0.5 – 120 sec.	
	V-			Voltage: 0 – 10V DC Load current: 2mA max.	
Additional event output	E-			Additional event output 1 point (EV3)	
Additional external control input signal (DI)	D-			Additional external control input 1 point (DI4)	
POWER SUPPLY	90-			100 – 240V AC±10%, 50/60Hz	
	08-			24V AC/DC±10%, 50/60Hz	
PROGRAM FUNCTION (OPTION)	N			None	
	P			Max. 4 patterns Total number of steps: 32	
EVENT OUTPUT (OPTION)	0			None	
	1			Event output 2 points (EV1, EV2)	
ANALOG OUTPUT/ CONMMUNICATION FUNCTION (OPTION)	0			None	
	3			0 – 10mVDC Output resistance: 10Ω	
	4			4 – 20mADC Resistive load: 300Ω max.	
	6			0 – 10VDC Load current: 2mA max.	
	5			RS-485 (Shimaden standard protocol, MODBUS protocol)	
EXTERNAL INPUT CONTROL SIGNAL (DI)/ CT INPUT (OPTION)/**Note: CT sold separately**	0			None	
	1			CT input 2 points	Note: Available only when control output 1 or 2 is Y or P.
	2			Control input 3 points (DI1, DI2, DI3)	
REMARKS	0			Without	
	9			With	

OPTIONAL ACCESSORIES

Name	Code	Remarks
CT	QCC01	CT for 30A (CTL-6-S)
CT	QCC02	CT for 50A (CTL-12-S36-8)
Shunt resistor	QCS002	250Ω ±0.1% External receiving impedance for current input
Terminal cover	QCR001	For SRS11A

ORDERING INFORMATION

ITEM	CODE	SPECIFICATIONS
SERIES	SRS12A-	DIN 72x72 Digital Controller
	SRS13A-	DIN 96x96 Digital Controller
	SRS14A-	DIN 96x48 Digital Controller
INPUT	8 Multi-input	Thermocouple: B, R, S, K, E, J, T, N, PLII, WRe5-26, {U, L (DIN43710)}, AuFe-Cr R.T.D.: Pt100/JPt100 Voltage (mV): -10 – 10, 0 – 10, 0 – 20, 0 – 50, 0 – 100, 10 – 50mV DC Scaling Possible (inverse scaling impossible) Range: -1999 – 9999 Span: 10 – 10000
	4 Current (mA)	Current (mA): 0~20, 4~20mA DC Receiving impedance: 250Ω
	6 Voltage (V)	-1 – 1, 0 – 1, 0 – 2, 0 – 5, 1 – 5, 0 – 10V DC Input resistance: Min. 500kΩ
CONTROL OUTPUT 1	Y	Contact: 1a, Contact capacity: 240V AC 2A/resistive load Proportional cycle: 1 – 120 sec.
	I	Current: 4 – 20mA DC Load resistance: 600Ω max.
	P	SSR drive voltage: 12V±1.5V DC/30mA max. Proportional cycle: 1 – 120 sec.
	V	Voltage: 0 – 10V DC Load current: 2mA max.
CONTROL OUTPUT 2 (OPTION)	N-	None
	Y-	Contact: 1a, Contact capacity: 240V AC 2A/resistive load Proportional cycle: 1 – 120 sec.
	I-	Current: 4 – 20mA DC Load resistance: 600Ω max.
	P-	SSR drive voltage: 12V±1.5V DC/30mA max. Proportional cycle: 1 – 120 sec.
	V-	Voltage: 0 – 10V DC Load current: 2mA max.
Additional event output	E-	Additional event output 1 point (EV3)
Additional external control input signal (DI)	D-	Additional external control input 1 point (DI4)
POWER SUPPLY	90-	100 – 240V AC±10%, 50/60Hz
	08-	24V AC/DC±10%, 50/60Hz
PROGRAM FUNCTION (OPTION)	N	None
	P	Max. 4 patterns Total number of steps: 32
EVENT OUTPUT (OPTION)	0	None
	1	Event output 2 points (EV1, EV2)
ANALOG OUTPUT (OPTION)	0	None
	3	0 – 10mVDC Output resistance: 10Ω
	4	4 – 20mADC Resistive load: 300Ω max.
	6	0 – 10VDC Load current: 2mA max.
CT INPUT (OPTION)/**Note: CT sold separately**	0	None
	1	CT input 2 points (Note: Available only when control output 1 or 2 is Y or P.)
EXTERNAL INPUT CONTROL SIGNAL (DI) (OPTION)	0	None
	2	Control input 3 points (DI1, DI2, DI3)
CONMMUNICATION FUNCTION (OPTION)	0	None
	5	RS-485 (Shimaden standard protocol, MODBUS protocol)
REMARKS	0	Without
	9	With

OPTIONAL ACCESSORIES

Name	Code	Remarks
CT	QCC01	CT for 30A (CTL-6-S)
CT	QCC02	CT for 50A (CTL-12-S36-8)
Shunt resistor	QCS002	250Ω ±0.1% External receiving impedance for current input
Terminal cover	QCR002	For SRS12A (3 pcs./set)
	QCR007	For SRS13A, SRS14A (2 pcs./set)

Input Type				Code		Measuring range							
Multi-input	Thermo-couple	B		01	*1	0	–	1800	°C	0	–	3300	°F
		R		02		0	–	1700	°C	0	–	3100	°F
		S		03		0	–	1700	°C	0	–	3100	°F
		K		04	*2	-199.9	–	400.0	°C	-300	–	750	°F
				05		0.0	–	800.0	°C	0	–	1500	°F
				06		0	–	1200	°C	0	–	2200	°F
		E		07		0	–	700	°C	0	–	1300	°F
		J		08		0	–	600	°C	0	–	1100	°F
		T		09	*2	-199.9	–	200.0	°C	-300	–	400	°F
		N		10		0	–	1300	°C	0	–	2300	°F
		PLII	*3	11		0	–	1300	°C	0	–	2300	°F
		WRe5-26	*4	12		0	–	2300	°C	0	–	4200	°F
		U	*5	13	*2	-199.9	–	200.0	°C	-300	–	400	°F
		L	*5	14		0	–	600	°C	0	–	1100	°F
		Kelvin K		15	*6	10.0	–	350.0	K	10.0	–	350.0	K
		Kelvin AuFe-Cr		16	*7	0.0	–	350.0	K	0.0	–	350.0	K
		Kelvin K		17	*6	10	–	350	K	10	–	350	K
		Kelvin AuFe-Cr		18	*7	0	–	350	K	0	–	350	K
	R.T.D.	Pt100		30		-100.0	–	350.0	°C	-150.0	–	650.0	°F
				31		-200	–	600	°C	-300	–	1100	°F
				32		-100.0	–	100.0	°C	-150.0	–	200.0	°F
				33		-50.0	–	50.0	°C	-50.0	–	120.0	°F
				34		0.0	–	200.0	°C	0.0	–	400.0	°F
		JPt100		35		-200	–	500	°C	-300	–	1000	°F
				36		-100.0	–	100.0	°C	-150.0	–	200.0	°F
				37		-50.0	–	50.0	°C	-50.0	–	120.0	°F
				38		0.0	–	200.0	°C	0.0	–	400.0	°F
				39		-100.0	–	350.0	°C	-150.0	–	650.0	°F
		Pt100		40		-199.9	–	550.0	°C	-300	–	1000	°F
				41		0.0	–	350.0	°C	0.0	–	650.0	°F
				42		0.0	–	550.0	°C	0	–	1000	°F
		JPt100		43		-199.9	–	500.0	°C	-300	–	1000	°F
				44		0.0	–	350.0	°C	0.0	–	650.0	°F
				45		0.0	–	500.0	°C	0	–	1000	°F
	Voltage (mV)	-10 – 10		71		Measuring range can be set by scaling function within the following range. Initial value: 0.0 – 100.0 Scaling range: -1999 – 9999 units Span: 10 – 10,000 units Decimal point position: None, 1/2/3 digits following decimal point Lower limit value is less than higher limit value. NOTE: For current input, install input terminals of the specified receiving impedance (250Ω) and use code 84 (0 – 20 mA) or 85 (4 – 20 mA).							
		0 – 10		72									
		0 – 20		73									
		0 – 50		74									
		10 – 50		75									
		0 – 100		76									
	Voltage (V)	-1 – 1		81									
		0 – 1		82									
		0 – 2		83									
		0 – 5		84									
		1 – 5		85									
		0 – 10		86									

Thermocouple: B, R, S, K, E, J, T, N: JIS/IEC
R.T.D. Pt100: JIS/IEC JPt100
*1 Thermocouple B: Accuracy guarantee not applicable to 400˚C or below.
*2 Thermocouple K, T, U: Accuracy of those readings below -100.0˚C is 0.75% FS.
*3 Thermocouple PLII: Platinel
*4 Thermocouple WRe5-26: ASTM E988-96
*5 Thermocouple U, L: DIN 43710
*6. Thermocouple K (Kelvin) accuracy

Temperature range			
10.0	– 30.0 K	(2.0%FS + [CJ error X 20] K + 1K)
30.0	– 70.0 K	(1.0%FS + [CJ error X 7] K + 1K)
70.0	– 170.0 K	(0.7%FS + [CJ error X 3] K + 1K)
170.0	– 270.0 K	(0.5%FS + [CJ error X 1.5] K + 1K)
270.0	– 350.0 K	(0.3%FS + [CJ error X 1] K + 1K)

*7. Thermocouple Metal-chromel (AuFe-Cr) (Kelvin) accuracy

Temperature range			
0.0	– 30.0 K	(0.7%FS + [CJ error X 3] K + 1K)
30.0	– 70.0 K	(0.5%FS + [CJ error X 1.5] K + 1K)
70.0	– 170.0 K	(0.3%FS + [CJ error X 1.2] K + 1K)
170.0	– 280.0 K	(0.3%FS + [CJ error X 1] K + 1K)
280.0	– 350.0 K	(0.5%FS + [CJ error X 1] K + 1K)

NOTE: For current input, install input terminals of the specified receiving impedance (250Ω) and use code 84 (0 – 20 mA) or 85 (4 – 20 mA).

NOTE: Unless otherwise specified, the measuring range will be set as follows when shipped from the factory:

Input	Standard/rating	Measuring range
Multi-input	K thermocouple	0.0 – 800.0˚C
Voltage (V)	0 – 10V DC	0.0 – 100.0 no legend

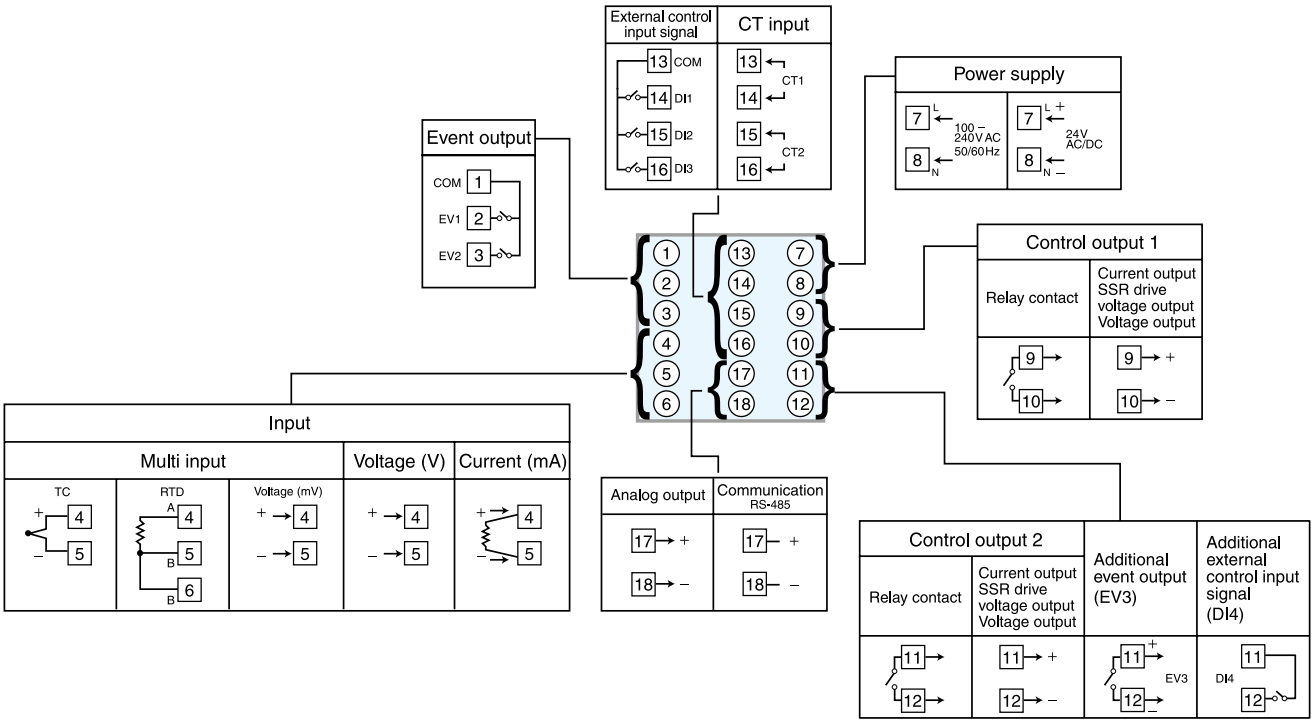
External control input signal
COM
DI1
DI2
DI3
CT input
CT1
CT2
Power supply
100 – 240 V AC 50/60 Hz
24 V AC/DC
Event output
COM
EV1
EV2
Control output 1
Relay contact
Current output
SSR drive voltage output
Voltage output
Input
Multi input
Voltage (V)
Current (mA)
TC
RTD
Voltage (mV)
Analog output
Communication RS-485
Control output 2
Relay contact
Current output
SSR drive voltage output
Voltage output
Additional event output (EV3)
Additional external control input signal (DI4)
EV3
DI4

SRS12A

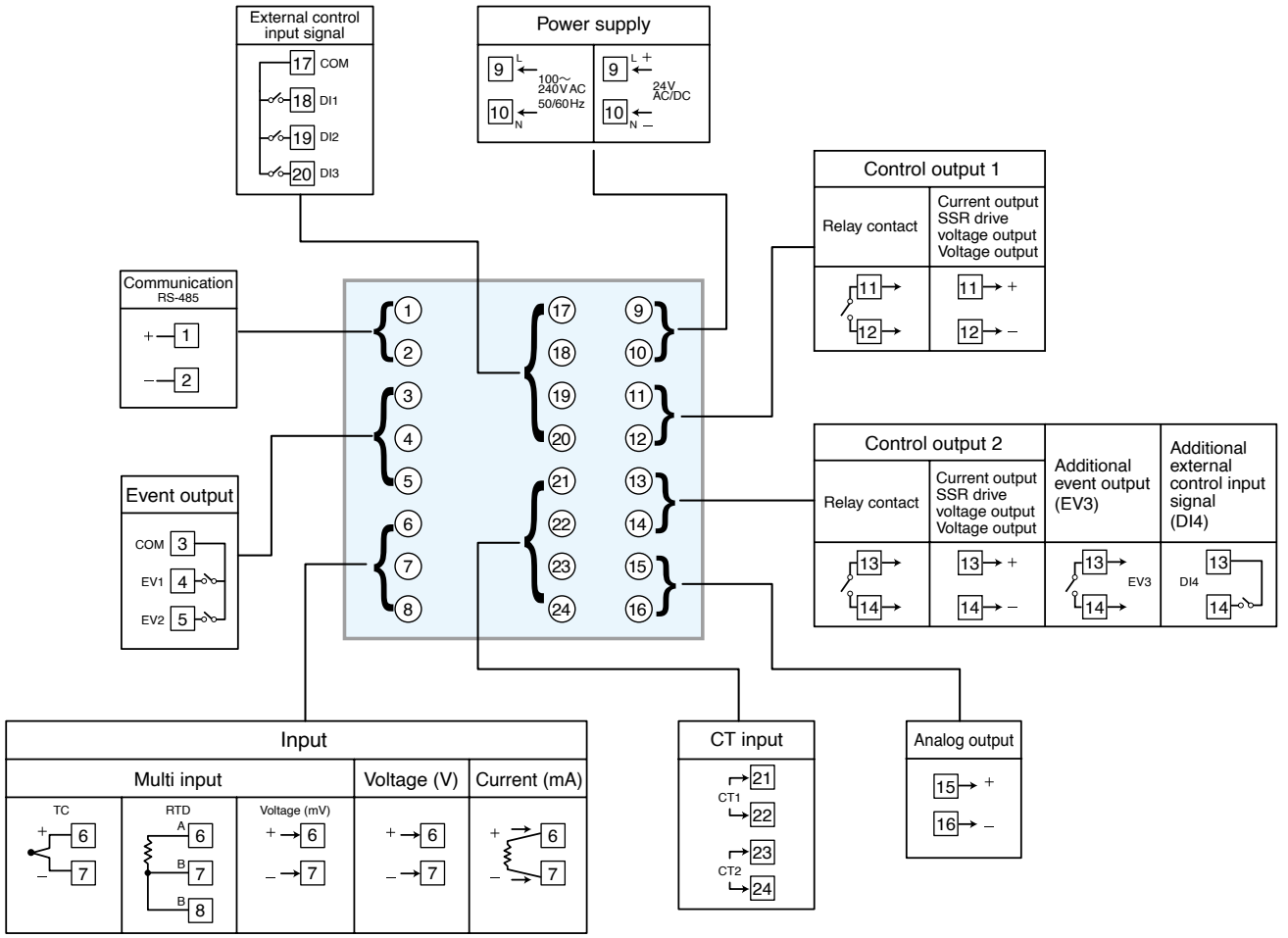
External control input signal
COM
DI1
DI2
DI3
Power supply
100~ 240 V AC 50/60 Hz
24 V AC/DC
Communication RS-485
Control output 1
Relay contact
Current output
SSR drive voltage output
Voltage output
Event output
COM
EV1
EV2
Control output 2
Relay contact
Current output
SSR drive voltage output
Voltage output
Additional event output (EV3)
Additional external control input signal (DI4)
EV3
DI4
Input
Multi input
Voltage (V)
Current (mA)
TC
RTD
Voltage (mV)
CT input
CT1
CT2
Analog output

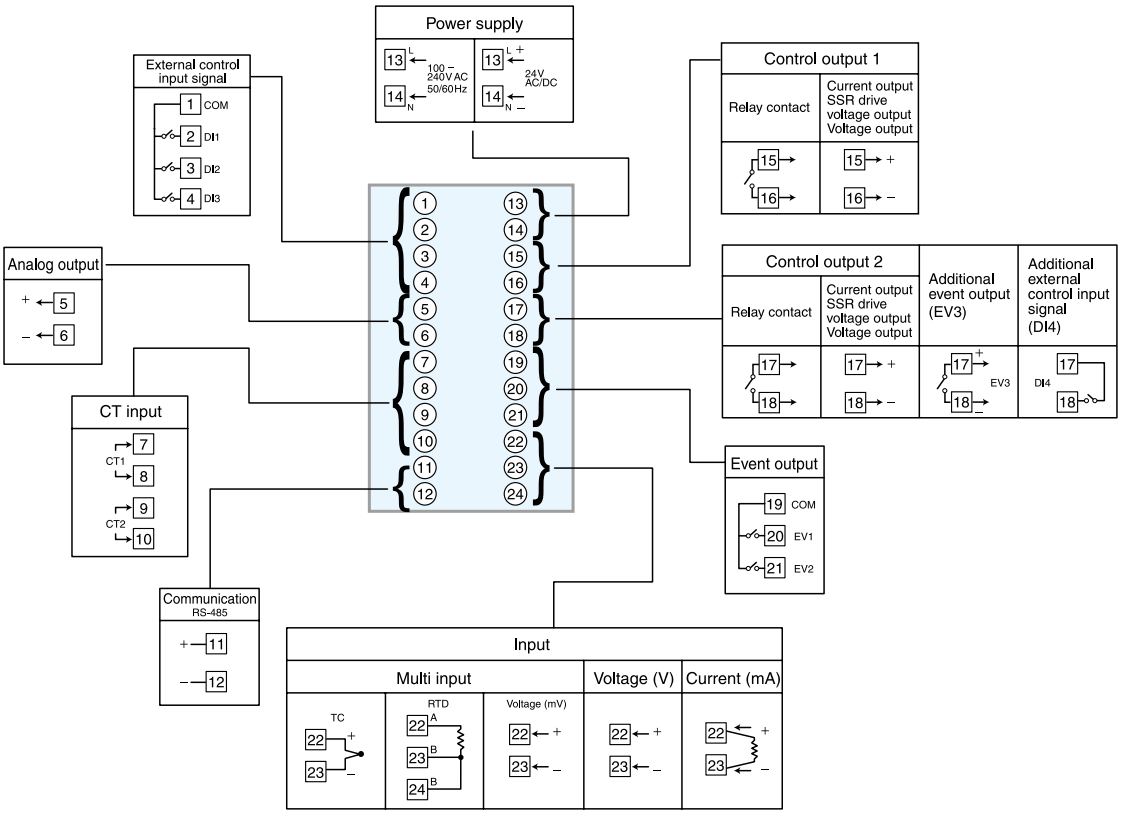

OPTIONAL TERMINAL COVER

QCR001

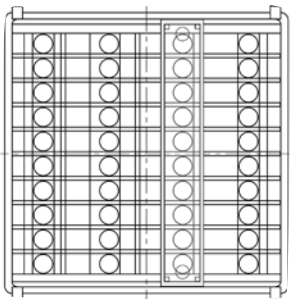

SRS11A

QCR002

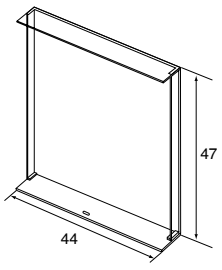

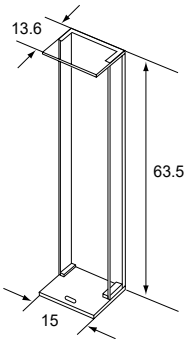

× 3 pcs.

SRS12A

QCR007

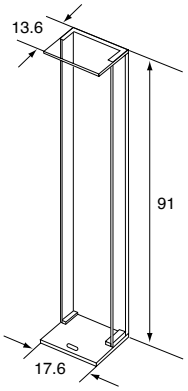

× 2 pcs.

SRS13A & SRS14A

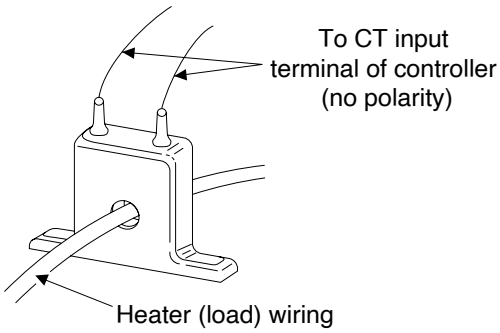

●CT FOR 30A (QCC01)

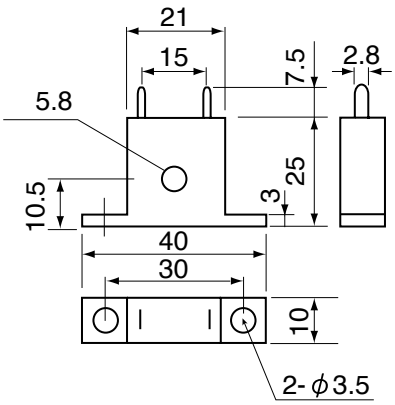

●CT FOR 50A (QCC02)

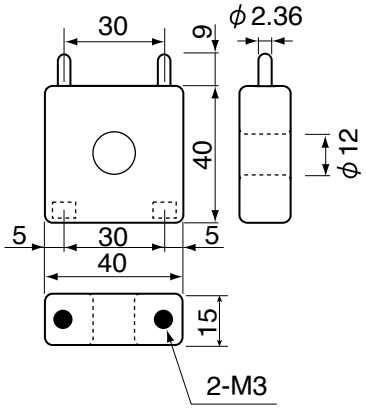

Unit: mm

⚠ Warning

• The SRS Series is designed for the control of temperature, humidity and other physical values of general industrial equipment. It is not to be used for any purpose which regulates the prevention of serious effects on human life or safety.

⚠ Caution

• If the possibility of loss or damage to your system or property as a result of failure of any part of the process exists, proper safety measures must be made before the instrument is put into use so as to prevent the occurrence of trouble.

ISO9001/ISO14001

ISO9001 • ISO14001 001

(The contents of this brochure are subject to change without notice.)

Temperature and Humidity Control Specialists

SHIMADEN CO., LTD.

Head Office: 2-30-10 Kitamachi, Nerima-Ku, Tokyo 179-0081 Japan
Phone: +81-3-3931-7891 Fax: +81-3-3931-3089
E-MAIL: exp-dept@shimaden.co.jp URL: http://www.shimaden.co.jp

11BSRS10A300ILC